CRAFTSMAN®

Product questions or problems?

1-888-331-4569

Customer Care Hot Line

Get answers to questions, troubleshoot problems, order parts, or schedule repair service.

Para respuestas a preguntas o problemas, y ordenar piezas o pedir servicio para la reparación de su equipo.

To help us help you, register your product at www.craftsman.com/registration

Para poderte ayudar mejor, registra tu producto en www.craftsman.com/registration

Join the Craftsman Club today!

CRAFTSMAN® CLUB

www.craftsman.com/signup

Receive exclusive member benefits including special pricing and offers, project sharing, expert advice, and SHOP YOUR WAY REWARDS!

Como miembro exclusivo, recibe diversos beneficios como ofertas, precios especiales, proyectos nuevos, consejos de expertos y nuestro programa de puntos SHOP YOUR WAY REWARDS!

® Registered Trademark / ™ Trademark of KCD IP, LLC in the United States, or Sears Brands, LLC in other countries
® Marca Registrada / ™ Marca de Fábrica de KCD IP, LLC en Estados Unidos, o Sears Brands, LLC in otros países

08.03.18 JSE

Printed in the U.S.A.

Repair Parts Manual

CRAFTSMAN®

LAWN TRACTOR

19.0 HP,* 42" Mower
Electric Start
Automatic Transmission

Model No.
917.203811

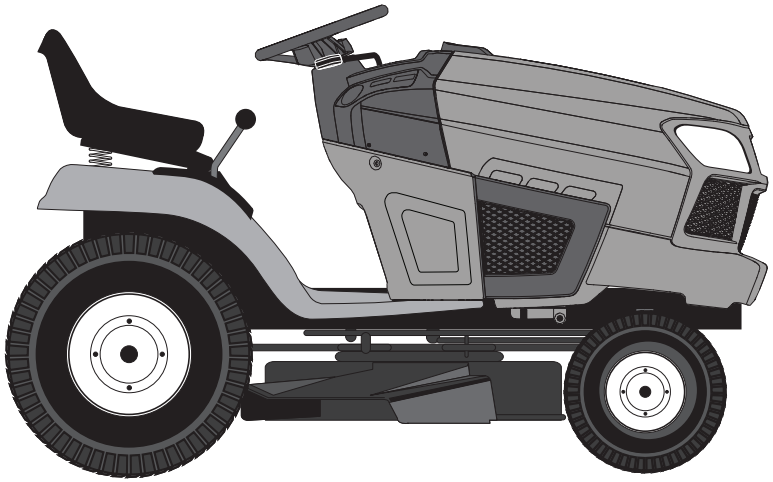

For answers to your questions about this product, call:
1-888-331-4569
Craftsman Customer Help Line

Sears Brands Management Corporation, Hoffman Estates, IL 60179 U.S.A.
Visit our Craftsman website: www.craftsman.com

* The power rating as declared by the engine manufacturer is the average gross power output at the specified RPM of a typical production engine for the engine model measured using SAE Standards for engine gross power. Please refer to the engine manufacturer for details.

115813527 Rev. 10

⚠WARNING: This tractor is equipped with an internal combustion engine and should not be used on or near any unimproved forest-covered, brush-covered or grass-covered land unless the engine's exhaust system is equipped with a spark arrester meeting applicable local or state laws (if any). If a spark arrester is used, it should be maintained in effective working order by the operator.

In the state of California the above is required by law (Section 4442 of the California Public Resources Code). Other states may have similar laws. Federal laws apply on federal lands. A spark arrester for the muffler is available through your nearest Sears service center (See ENGINE ASSEMBLY section of this manual).

REPAIR PROTECTION AGREEMENTS

Congratulations on making a smart purchase. Your new Craftsman® product is designed and manufactured for years of dependable operation. But like all products, it may require repair from time to time. That's when having a Repair Protection Agreement can save you money and aggravation.

Here's what the Repair Protection Agreement* includes:

- ☑ **Expert service** by experienced service technicians trusted in millions of homes every year.
- ☑ **Unlimited service and no charge** for parts and labor on all covered repairs.
- ☑ **Product replacement** up to $1500 if your covered product can't be fixed.
- ☑ **Discount of 25%** from regular price of service and related installed parts not covered by the agreement.
- ☑ **Fast help by phone –** phone support from a service agent on all products to help troubleshoot problems. Think of us as a "talking owner's manual."

Once you purchase the Repair Protection Agreement, a simple phone call is all that it takes for you to schedule service. You can call anytime day or night.

The Repair Protection Agreement is a risk-free purchase. If you cancel for any reason during the product warranty period, we will provide a full refund. Or, a prorated refund anytime after the product warranty period expires. Purchase your Repair Protection Agreement today!

Some limitations and exclusions apply. For prices and additional information call 1-800-827-6655.

Sears Installation Service

For Sears professional installation of home appliances, garage door openers, water heaters, and other major home items, call **1-888-331-4569.**

TRACTOR - - MODEL NUMBER 917.203811

BRIGGS & STRATTON ENGINE-MODEL NUMBER 33R877, TYPE NUMBER 0002-G1

KEY NO.	PART NO.	DESCRIPTION
552	697144	Bushing-Governor Crank
562	691119	Screw (Governor Control Lever)
579	691029	Nut (Starter Cable)
584	794682	Cover-Breather Passage
601	791850	Hose-Clamp (Green)
614	691620	Pin-Cotter (Governor Crank)
616	692012	Crank-Governor
617	692138	Seal-O Ring (Intake Manifold) (Red)
633	699813	Seal-Choke/Throttle (Choke Shaft)
634	698779	Spring/Seal Assembly
635	691909	Boot-Spark Plug
654	690958	Nut (Carburetor)
684	697157	Screw (Breather Passage Cover)
691	692407	Seal-Governor Shaft
697	791680	Screw (Drive Cap)
718	690959	Pin-Locating
729	691224	Clip-Wire
741	697128	Gear-Timing
750	790832	Screw (Oil Pump Cover)
757	793242	Link-Counterweight
758	793763	Counterweight
759	697392	Pin-Counterweight
773	796448	Retainer (Fuel Pump)
783	693713	Gear-Pinion
789	698329	Harness-Wiring
797	693167	Nut (Brush Retainer)
801	691283	Cap-Drive
802	691286	Cap-End
830	691095	Stud-Rocker Arm
842	691031	Seal-O Ring (Dipstick)
847	790442	Dipstick/Tube Assembly
850	100106	Sealant-Liquid
851	692424	Terminal-Spark Plug
868	690968	Seal-Valve
877	790544	Wire/Connector-Alternator
883	692236	Gasket-Exhaust
914	691108	Screw (Rocker Cover)
918	791744	Hose-Vacuum (Cut to Required Length)
943	690589	Seal-O Ring (Oil Pump Cover)
947	699915	Solenoid-Fuel
964	799159	Cap-Connector
965	499613	Cover-Oil Pump
967	793685	Filter-Pre Cleaner
968	591644	Cover-Air Cleaner
975	699502	Bowl-Fuel
987	698777	Seal-Throttle Shaft
1005	796084	Fan-Flywheel
1017	796981	Screen-Oil Pump
1022	272475s	Gasket-Rocker Cover
1023	797421	Cover-Rocker
1024	794644	Pump-Oil
1026	692003	Rod-Push (Intake) (Aluminum)
	692011	Rod-Push (Exhaust) (Steel)
1027	795890	Filter-Oil
1029	691751	Arm-Rocker
1034	690822	Guide-Push Rod
1036		Label-Emissions (Available from a Briggs & Stratton Authorized Dealer)
1040	698368	Plate-Trim
1044	698139	Screw (Flywheel)
1051	691265	Ring-Retaining
1058	277675	Operator's Manual
1059	698516	Kit-Screw/Washer (Alternator)
1090	691293	Retainer-Brush
1091	691333	Cap-Limiter
1095	794152	Gasket Set-Valve
1119	691183	Screw (Alternator)
1127	695407	Screw (Float Bowl)
1139	796449	Washer (Fuel Pump)
1263	697124	Reed-Breather
1264	697104	Screw (Breather Reed)
1265	794151	Support-Blower Housing
1266	691917	Seal-O Ring (Intake Elbow) (Red)
1270	793243	Plug-AVS Counterweight
1279	691108	Screw (Blower Housing Support)
1329	N/A	Replacement Engine (Not Available at this Printing)
1330	N/A	Repair Manual (Not Available at this Printing)
1332	591991	Washer (Rotating Screen)

Carburetor Overhaul Kit	Key No. 121
Engine Gasket Set	Key No. 358
Valve Gasket Set	Key No. 1095

NOTE: All component dimensions given in U.S. inches
1 inch = 25.4 mm

TRACTOR - - MODEL NUMBER 917.203811

BRIGGS & STRATTON ENGINE-MODEL NUMBER 33R877, TYPE NUMBER 0002-G1

KEY NO.	PART NO.	DESCRIPTION	KEY NO.	PART NO.	DESCRIPTION
1	591465	Cylinder Assembly	135	698780	Tube-Fuel Transfer
3	391086s	Seal-Oil (Magneto Side)	137	698781	Gasket-Float Bowl
4	592849	Sump-Engine	141	792777	Kit-Choke Shaft
5	591750	Head-Cylinder	187	791805	Line-Fuel (Formed)
7	794114	Gasket-Cylinder Head	187A	791766	Line-Fuel (Cut to Required Length)
9	697109	Gasket-Breather			
11	794683	Tube-Breather	188	691693	Screw (Control Bracket)
12	697110	Gasket-Crankcase	192	691986	Adjuster-Rocker Arm
13	592244	Screw (Cylinder Head)	202	691841	Link-Mechanical Governor
15	690946	Plug-Oil Drain	209	796260	Spring-Governor (Green)
16	591763	Crankshaft	216	691840	Link-Choke
20	795387	Seal-Oil (PTO Side)	217	695409	Spring-Choke Return
22	692125	Screw (Crankcase Cover/Sump)	222	694042	Bracket-Control
23	591759	Flywheel	227	691374	Lever-Governor Control
24	591757	Key-Flywheel (Steel)	232	691842	Spring-Governor Link
25	95858	Piston Assembly (Standard)	238	691843	Cap-Valve
	795877	Piston Assembly (020" Oversize)	240	691035	Filter-Fuel
26	794126	Ring Set (Standard)	265	691024	Clamp-Casing
	794127	Ring Set (.020" Oversize)	267	794904	Screw (Casing Clamp)
27	698469	Lock-Piston Pin	276	695410	Washer-Sealing
28	795861	Pin-Piston	304	592814	Housing-Blower
29	794571	Rod-Connecting	305	697102	Screw (Blower Housing) (1/4-20x1.21)
32	791118	Screw (Connecting Rod)			
33	591752	Valve-Exhaust	305A	793376	Screw (Blower Housing) (1/4-20x.68)
34	591751	Valve-Intake			
35	691279	Spring-Valve (Intake)	305B	795891	Screw (Blower Housing to Intake Elbow) (#10-16x.43)
36	691279	Spring-Valve (Exhaust)			
37	699882	Guard-Flywheel	305C	799370	Screw (Blower Housing) (1/4-20x.90)
42	499586	Keeper-Valve			
43	691968	Slinger-Governor/Oil	306	794953	Shield-Cylinder
45	690564	Tappet-Valve	307	691693	Screw (Cylinder Shield)
46	793880	Camshaft	309	693551	Motor-Starter
48	N/A	Short Block (Not Available at this Printing)	310	690323	Screw (Starter Motor)
			311	497608	Brush Set
50	592842	Manifold-Intake	324	796309	Screen/Cup Assembly
51	692137	Gasket-Intake	333	799650	Armature-Magneto
51A	796081	Gasket-Intake	334	691061	Screw (Magneto Armature)
53	591260	Stud (Carburetor)	337	491055s	Plug-Spark
54	691148	Screw (Intake Manifold)	358	796187	Gasket Set-Engine
78	691693	Screw (Flywheel Guard)	377	691639	Key-Woodruff
94	793610	Kit-Idle Mixture	404	691691	Washer (Governor Crank)
95	690718	Screw (Throttle Valve)	415	794129	Plug (Cover/Retainer)
98	695408	Kit-Idle Speed	415A	794903	Plug (Intake Manifold)
104	694918	Pin-Float Hinge	431	799043	Elbow-Intake
105	696136	Valve-Float Needle	445	793569	Filter-Air Cleaner Cartridge
108	695419	Valve-Choke	462	691261	Washer (Starter Cable)
117	796251	Jet-Main (Standard)	474	592831	Alternator
118	791406	Jet-Main (High Altitude)	503	691532	Strap-Starter
121	796184	Kit-Carburetor Overhaul	505	691251	Nut (Governor Control Lever)
125	591736	Carburetor	510	693699	Drive-Starter
127	690727	Plug-Welch	513	692024	Clutch-Drive
130	792747	Valve-Throttle	523	699908	Dipstick
131	792765	Kit-Throttle Shaft	524	691032	Seal-Dipstick Tube
133	694914	Float-Carburetor	525	697184	Tube-Dipstick

TRACTOR - - MODEL NUMBER 917.203811

SCHEMATIC

SCH11

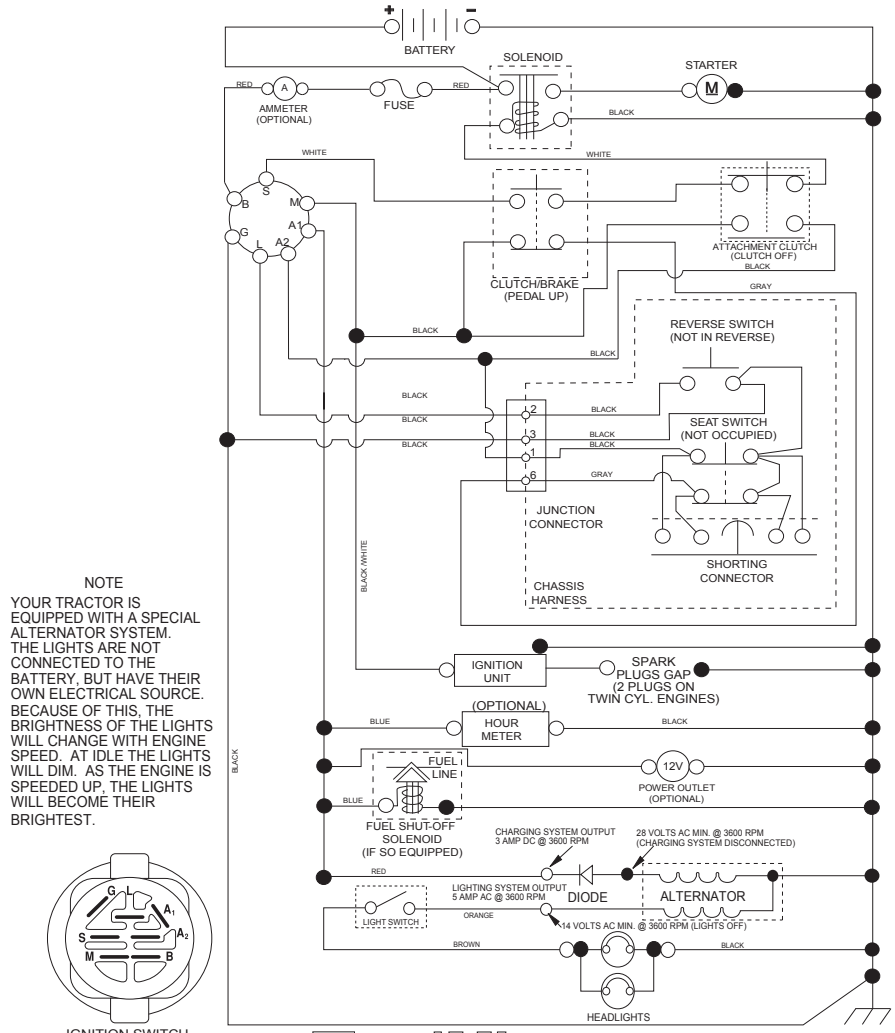

NOTE

YOUR TRACTOR IS EQUIPPED WITH A SPECIAL ALTERNATOR SYSTEM. THE LIGHTS ARE NOT CONNECTED TO THE BATTERY, BUT HAVE THEIR OWN ELECTRICAL SOURCE. BECAUSE OF THIS, THE BRIGHTNESS OF THE LIGHTS WILL CHANGE WITH ENGINE SPEED. AT IDLE THE LIGHTS WILL DIM. AS THE ENGINE IS SPEEDED UP, THE LIGHTS WILL BECOME THEIR BRIGHTEST.

IGNITION SWITCH

POSITION	CIRCUIT "MAKE"
OFF	M+G+A1
RUN/OVERRIDE	B+A1
RUN	B+A1 L+A2
START	B + S + A1

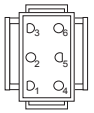

CHASSIS HARNESS CONNECTOR (MATING SIDE)

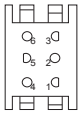

DASH HARNESS CONNECTOR (MATING SIDE)

WIRING INSULATED CLIPS
NOTE: IF WIRING INSULATED CLIPS WERE REMOVED FOR SERVICING OF UNIT, THEY SHOULD BE RE-INSTALLED TO PROPERLY SECURE YOUR WIRING.

NON-REMOVABLE CONNECTIONS

REMOVABLE CONNECTIONS

ELECTRICAL

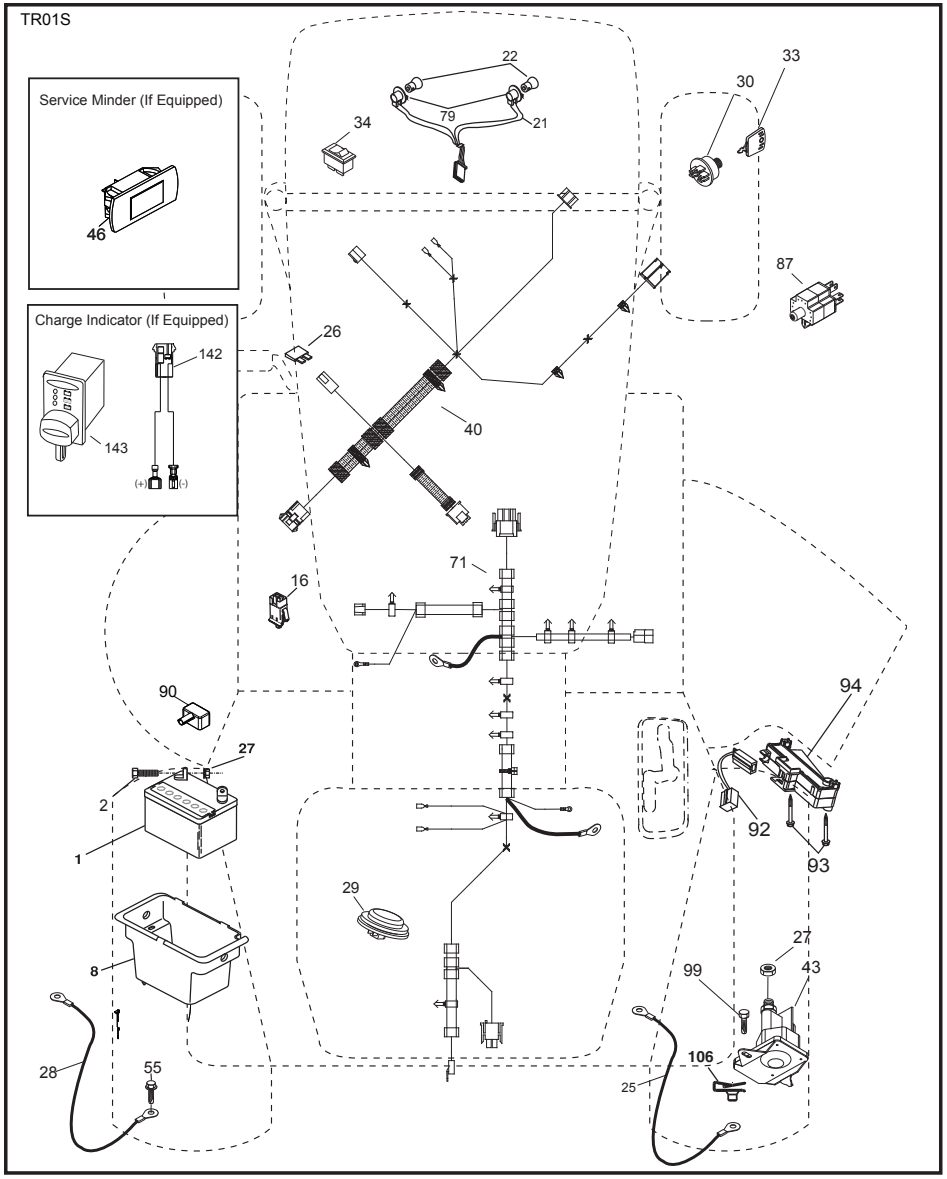

BRIGGS & STRATTON ENGINE-MODEL NUMBER 33R877, TYPE NUMBER 0002-G1

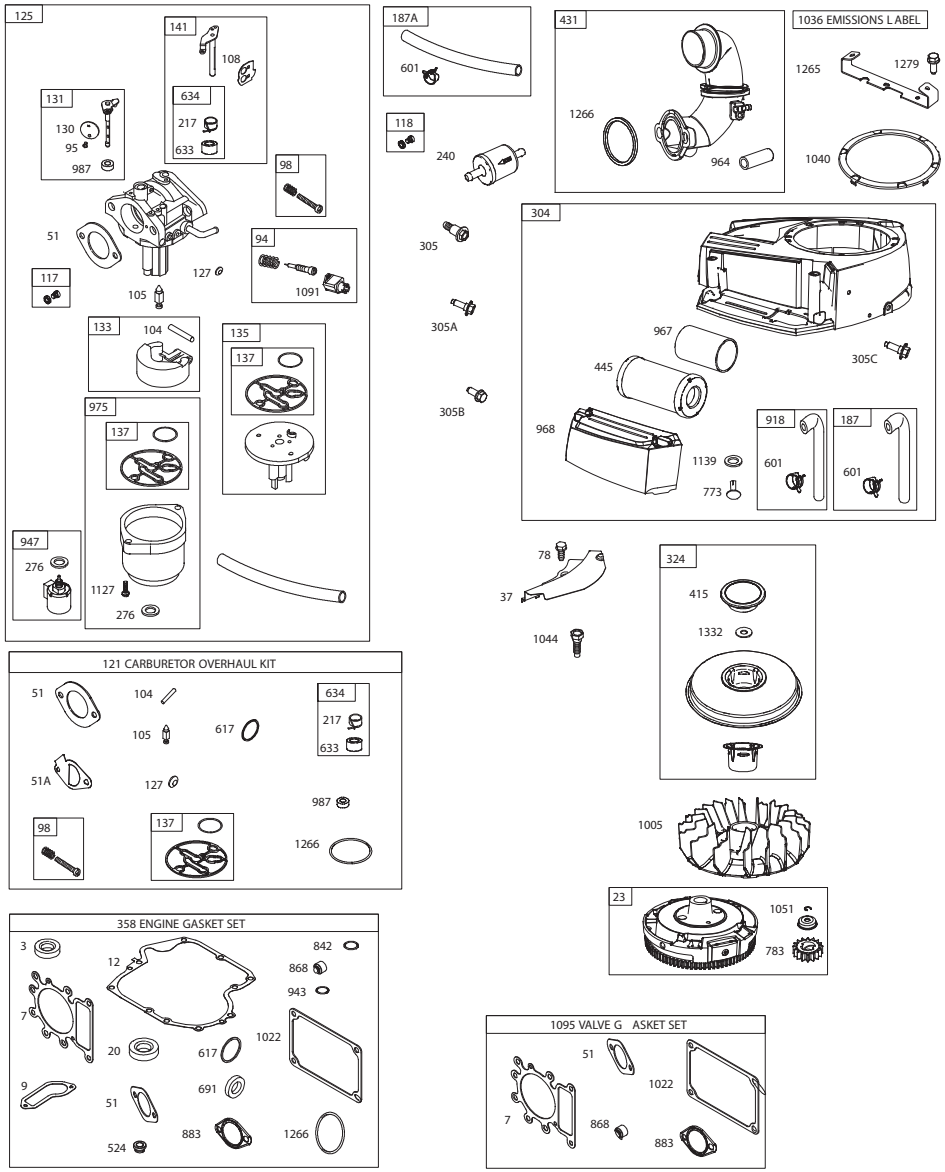

BRIGGS & STRATTON ENGINE-MODEL NUMBER 33R877, TYPE NUMBER 0002-G1

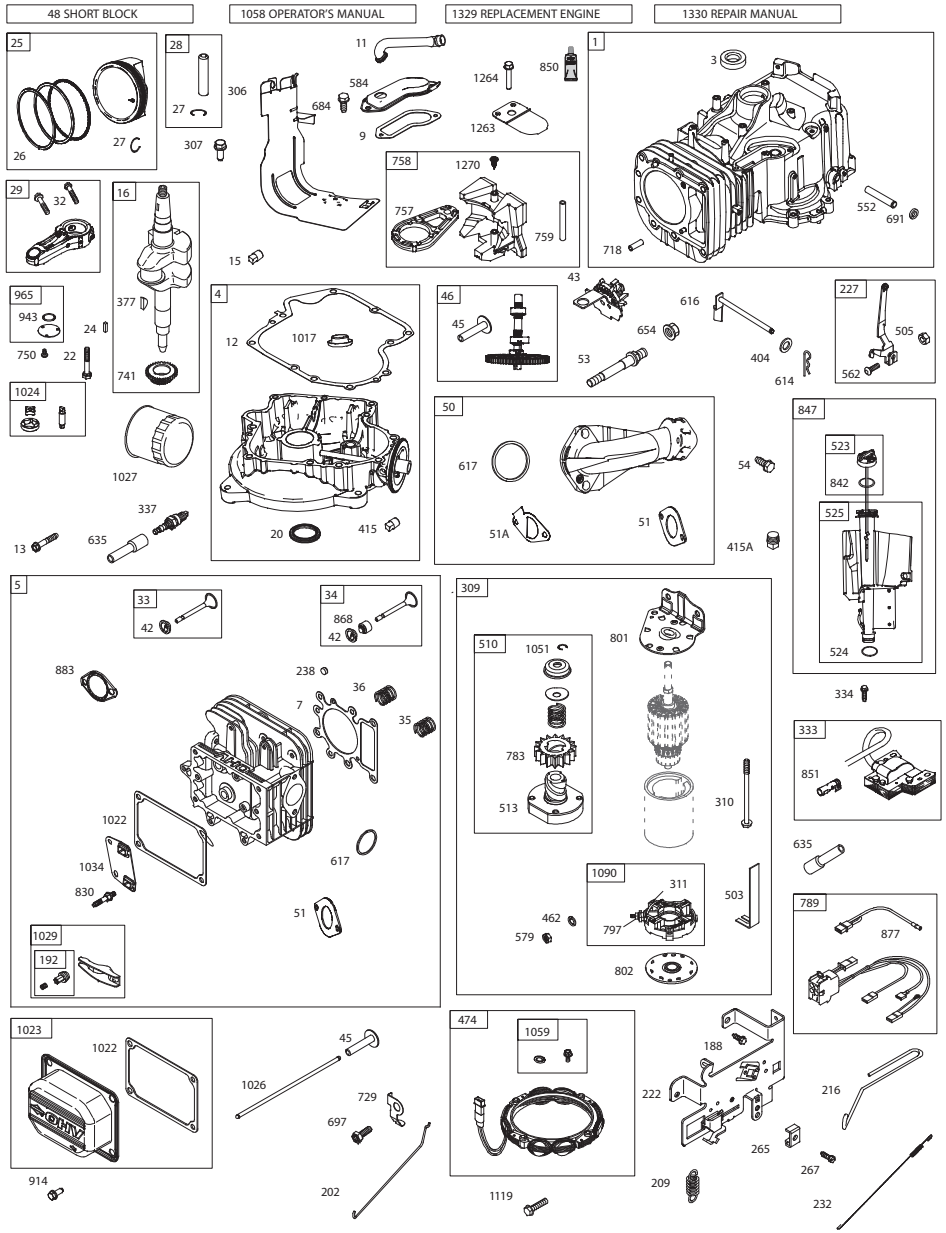

ELECTRICAL

KEY NO.	PART NO.	DESCRIPTION
1	163465	Battery
2	74760412	Bolt Hex Hd 1/4-20 unc x 3/4
8	193228	Box Battery
16	176138	Switch Interlock Push-In
21	400252	Harness Socket Light w/4152J
22	4152J	Bulb Light
25	581498001	Cable Starter
26	175158	Fuse
27	73510400	Nut Keps Hex 1/4-20 unc
28	421686	Cable, Ground
29	401545	Switch, Seat
30	193350	Switch, Ign
33	411932	Key/Chain
34	110712X	Switch Light / Reset
40	581023101	Harness Ign. Dash
43	582042801	Solenoid
55	17060512	Screw Thdrol 5/16-18 x 3/4 TYTT
71	501133701	Harness Ign. Chassis
79	175242	Bulbholder Asm. Incan Descent
87	197802	Switch Interlock Clutch Cable
90	435395	Cover Terminal Battery
92	196615	Harnais
93	192540	Screw
94	191834	Reverse
99	17670412	Screw
106	174814	Palnut

NOTE: All component dimensions given in U.S. inches
1 inch = 25.4 mm

CHASSIS ASSEMBLY

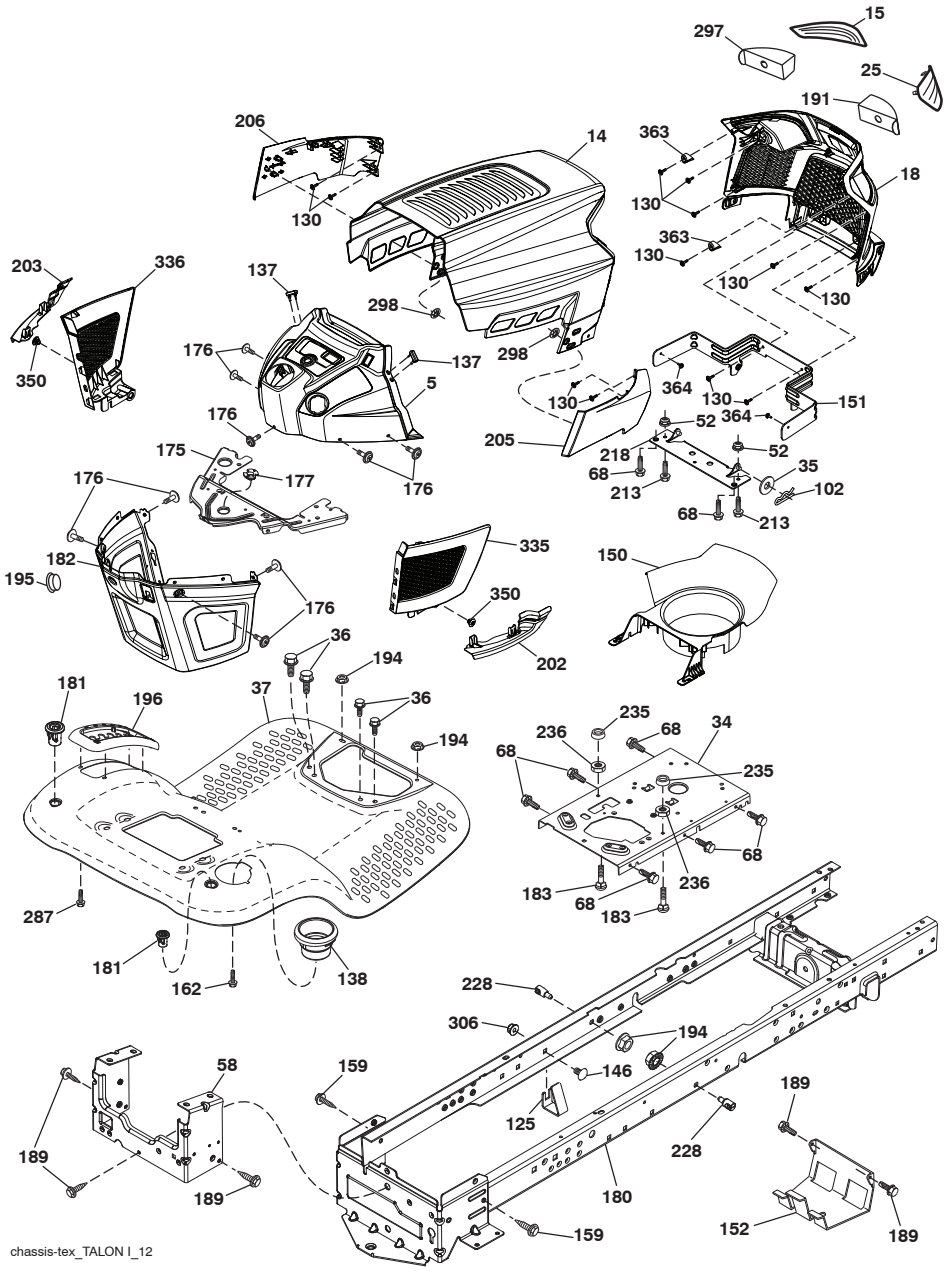

chassis-tex_TALON I_12

HYDRO-GEAR TRANSAXLE - MODEL NUMBER (T2-CDBE-5X1A-18C1)

KEY NO.	PART NO.	DESCRIPTION
34	584280701	Arm Bypass
35	584281001	Ring, Ret .375 Ext
41	584281201	Screw 5/16-18X1
42	584289801	Arm Control
43	584281301	Screw Set 5/16-24X2.50
44	584283301	Washer Belleville
45	584283101	Washer Plastic.32X.80X.21
46	584283001	Washer.34X.88X.06
47	584282801	Spacer .32X.59X.50
48	584282701	Spring Helical Comp
49	584289501	Nut,Hex 5/16-24 Nylon Insert
120	584282601	Puck.Brake
121	584282501	Rotor.Brake
122	584289601	Plate.Puck
124	584289701	Yoke.Brake
125	584287501	Pin.Brake.31X.73 Plated
126	584282401	Spacer.26X.57X.87
127	584281401	Screw ¼-20X2.0 W/Patch
128	584281501	Screw ¼-20X1 Patch
129	584282201	Spring, Comp Brake Anti Drag
130	584282301	Arm.Brake
131	584287401	Washer .34X.88X.06
132	584281701	Nut.Castle 5/16-24 Pl
133	584286601	Pin.Cotter 3/32X3/4
134	584281901	Spring Brake Arm Bias
150	584282001	Fan 7", 10 Blade
151	584286101	Pulley 4.0
152	584282101	Nut,Hex Ja ½-20 W Patch
153	587798401	Keeper, Belt
154	587798501	Hub, Pulley
155	587798701	Screw, Self-Tap 10-32 x .5 Patch
180	584281601	Spring,Clip Housing Thrust
203	587803701	Kit,E-Tank/Vented Cap
204	584285002	Kit,Fan & Pulley
205	584285001	Kit, Seal

NOTE: All component dimensions given in U.S. inches
1 inch = 25.4 mm

HYDRO-GEAR TRANSAXLE - MODEL NUMBER (T2-CDBE-5X1A-18C1)

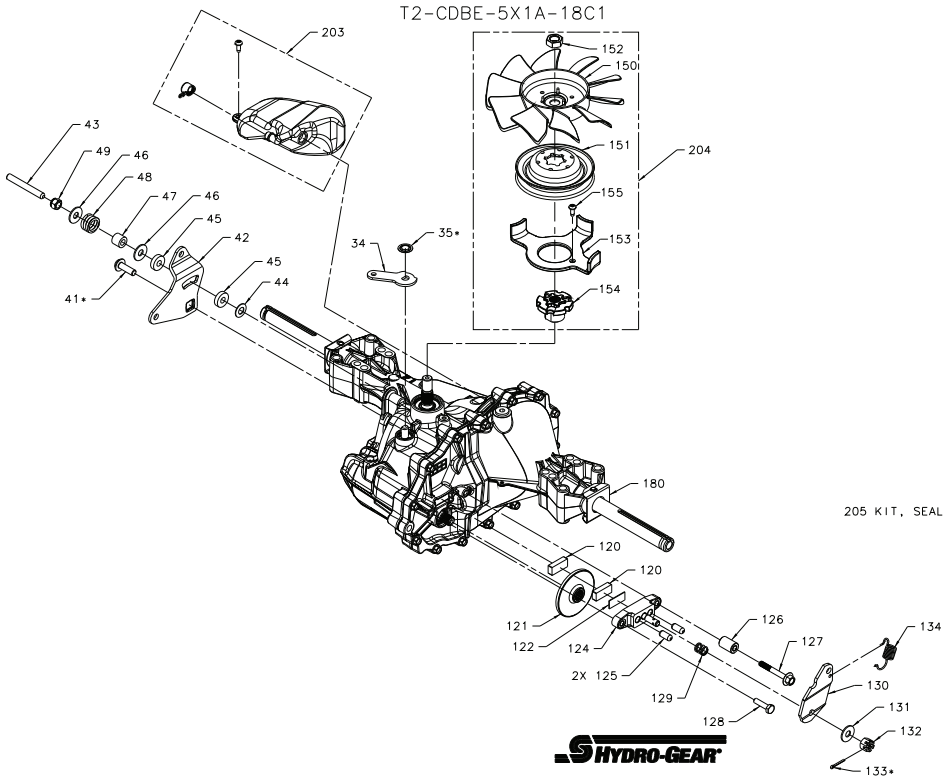

CHASSIS ASSEMBLY

KEY NO.	PART NO.	DESCRIPTION
5	580485903	Dash
14	580354403	Hood
15	580485601	Lens LH
18	580485302	Grille
25	580484501	Lens RH
34	580910801	Plate engine
35	19111116	Washer 11/32 x 11/16 x 16 Ga.
36	17060512	Screw 5/16-18 x 3/4
37	414872X615	Fender
52	73680500	Nut Crown lock 5/16-18
58	412280	Drawbar upper
68	539990858	Screw Thdrol 5/16-18 x 1/2
102	4497H	Retainer Spring 1"
125	581684801	Clip Fuel Line
130	416358	Screw # 10 x .750 BOS Thread
137	407590	Bumper Dash
138	193224X428	Cupholder
146	581857901	Bolt
150	580485503	Duct Heat Hood
151	580663302	Bracket Pivot
152	199535	Shield Browning/Debris
159	17000612	Screw Hexwsh Thdrol 3/8-16 x 3/4
162	142432	Screw Hex Wsh Hi-Lo 1/4 x 1/2
175	196304	Crossmember
176	400776	Screw 10-24 x 5/8 Wshd Qdrx
177	195228	Bushing Steering
180	415063	Chassis
181	193102X428	Bushing Mtg. Fender Crgo.
182	586738602	Dash Lower
183	74520520	Bolt 5/16-18 x 1-1/4
189	17000512	Screw 5/16-18 x 3/4
191	580485101	Mylar Headlight RH
194	73900500	Nut Lock Hex Flange 5/16-18
195	401556X428	Plug Hole Dash 12V Adapter
196	414579	Console Asm. Deck Lift
202	580485001	C-Closeout Lwr Trm RH
203	580484801	C-Closeout Lwr Trm LH
205	580843706	Assembly Corner RH
206	580843806	Assembly Corner LH
213	74760512	Bolt hex HD 5/16-18 unc x 3/4
218	580897302	Pivot Hood Assy
228	195161	Stud Fastener
235	406129	Spacer Fender
236	73930500	Nut Center Lock 5/16-18
287	17600406	Screw Hex Washead 1/4-20 x 3/8
297	580484901	Mylar Headlights LH
298	580851001	Nut Push
306	73900600	Nut
335	580484602	C-Side Closeout RH
336	580484402	C-Side Closeout LH
350	445143	Clip X-Mass Tree
363	580724501	Cap Talon Grille
364	17060408	Screw
- - -	404951X428	Plug Dash SRVMNDR

NOTE: All component dimensions given in U.S. inches
1 inch = 25.4 mm

GROUND DRIVE

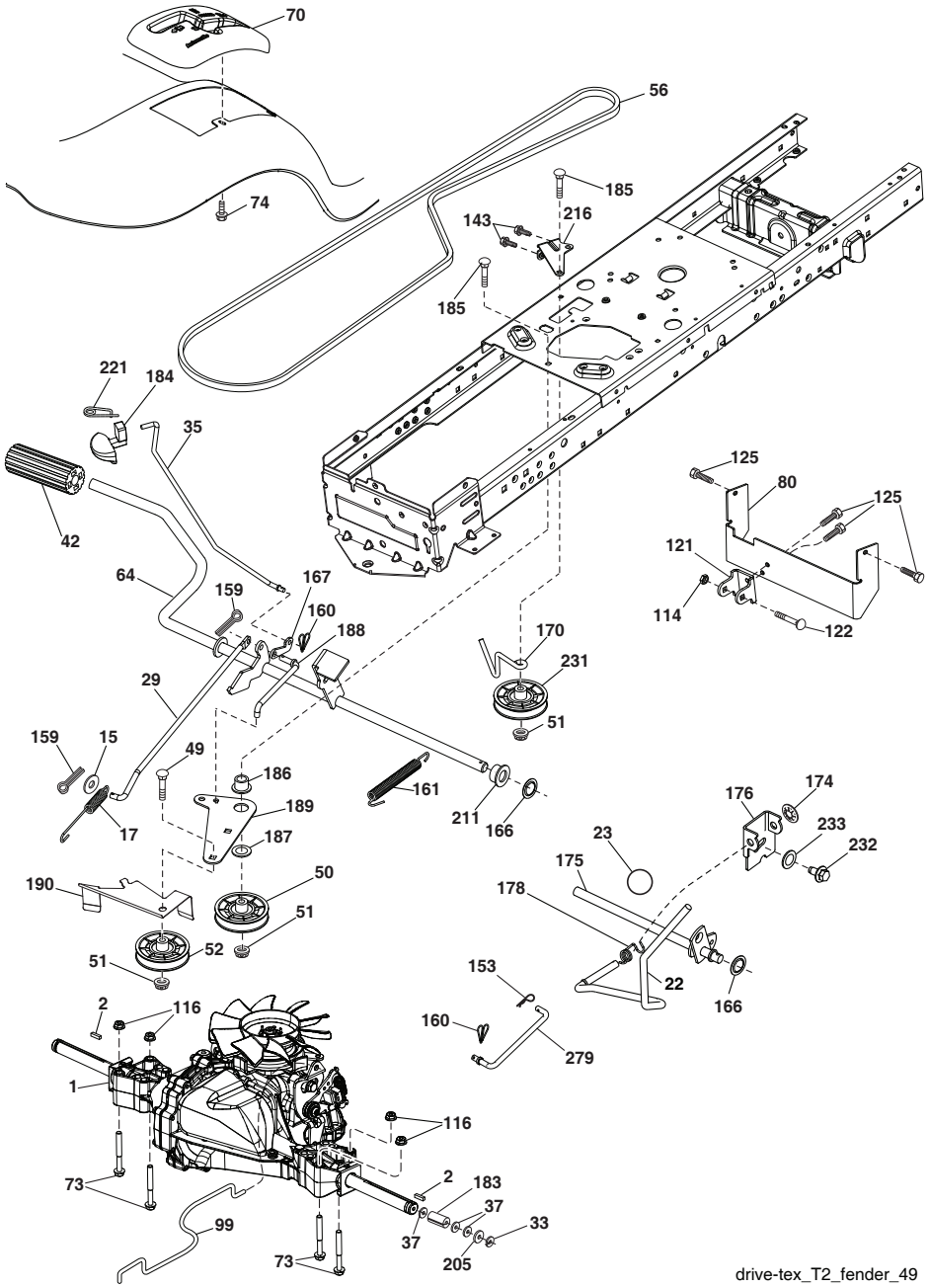

DECALS

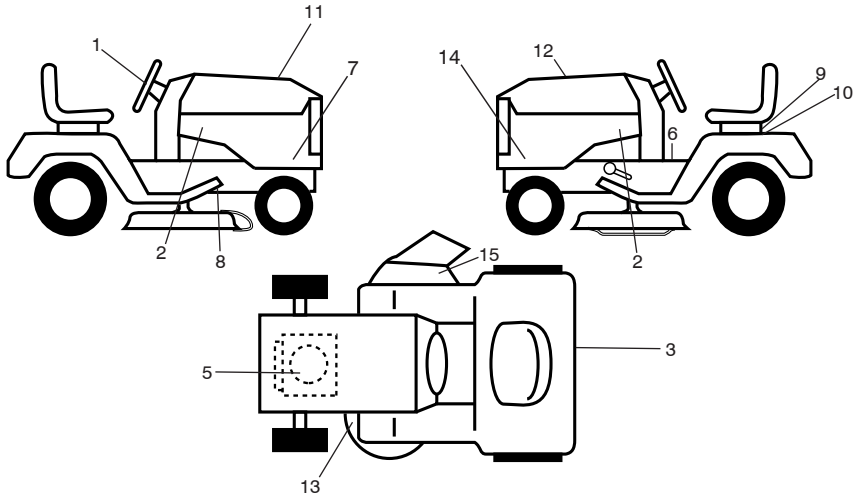

KEY NO.	PART NO.	DESCRIPTION
1	581894601	Decal, Steering
2	585767601	Decal, Hood
3	587390201	Decal, Fender
5	582522301	Decal, Engine HP
6	581578801	Decal, Fender Warning
7	586207401	Decal, Sideskirt RH
8	421534	Decal, V-Belt Schematic Drive
9	434996	Decal, Battery Warning
10	434995	Decal, Battery
11	584153601	Decal, Replacement
12	585571401	Decal, Warning Customer Responsibility
13	581580001	Decal, Mower V-Belt SCH.
14	586207402	Decal, Sideskirt LH
15	584904601	Decal, Deck/Deflect Warning
- -	193226X428	Pad, Footrest LH
- -	193227X428	Pad, Footrest RH
- -	581724801	Decal, Bypass
- -	115813426	Manual, Operator's (English/Spanish)
- -	115813527	Manual, Parts
- -	588799624	Manual, Quick Start Guide (English/Spanish)

WHEELS & TIRES

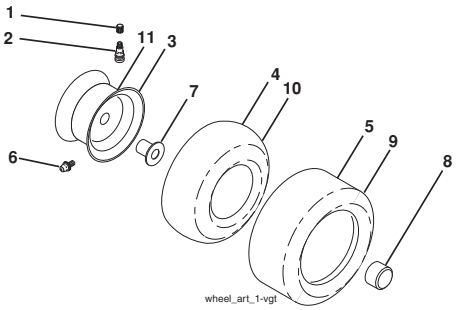

KEY NO.	PART NO.	DESCRIPTION
1	59192	Cap, Valve, Tire
2	65139	Stem, Valve
3	106732X613	Rim Assembly, Front
4	59904	Tube, Front
5	106222X	Tire, Front 15 x 6-6
6	278H	Fitting, Grease
7	9040H	Bearing, Flange
8	104757X428	Cap, Axle (Front Wheel Only)
9	138468	Tire, Rear 20 x 8-8
10	7152J	Tube, Rear
11	106108X613	Rim Assembly, Rear
- -	144334	Sealant, Tire (10 oz. Tube)

NOTE: All component dimensions given in U.S. inches
1 inch = 25.4 mm

LIFT ASSEMBLY

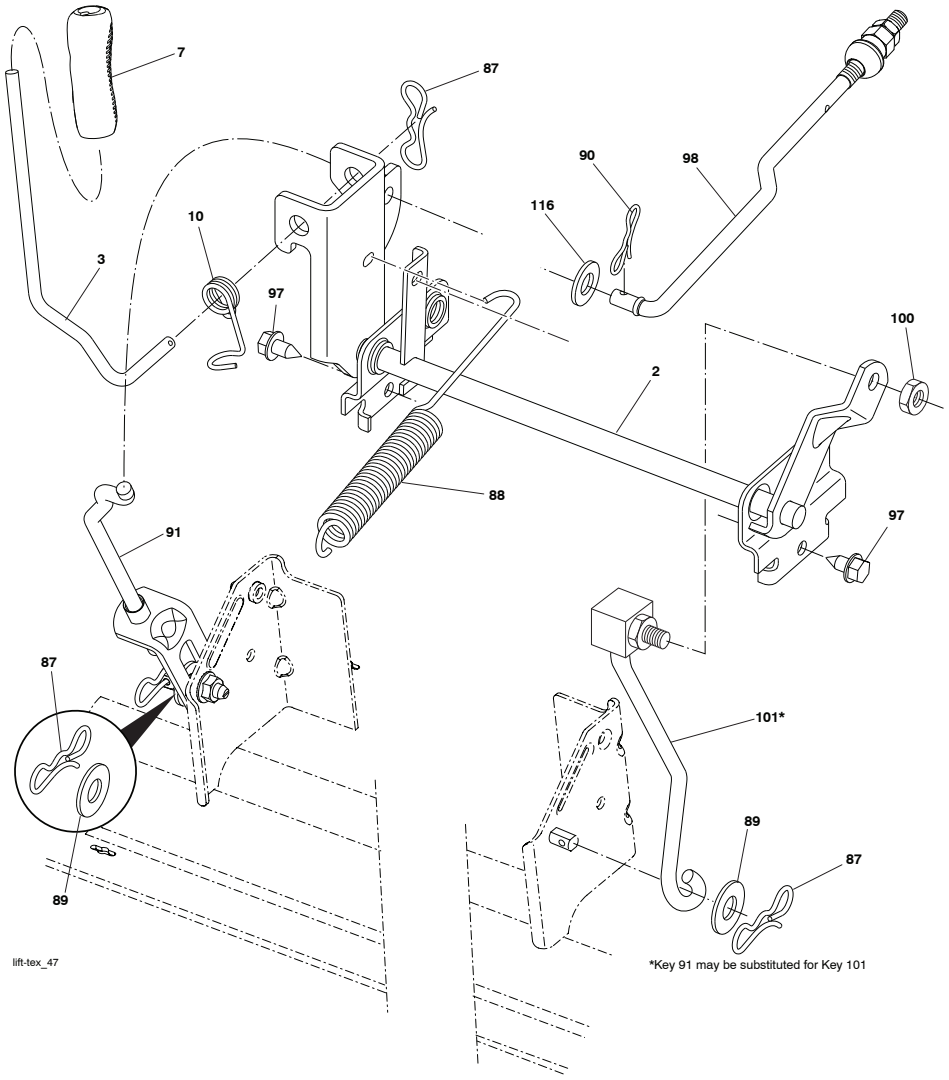

KEY NO.	PART NO.	DESCRIPTION
2	422027	Shaft Asm., Cross Lift
3	195231	Lever Asm., Lift RH
7	445060X428	Grip, Lever
10	196314	Spring Torsion
87	194209	Pin Cotter 7/16 Bow Tie Lock
88	410710	Spring Lift Assist
89	19191912	Washer Clear Zinc
90	194208	Pin Cotter 5/16 Bow Tie Lock
91	197984	Link Lift Susp Mower Rear
97	17000612	Screw 3/8-16 x .75
98	581506901	Link Lift Susp. Front Mower
100	73930600	Nut Centerlock 3/8-16 unc
101	581506501	Link Asm Lift Fixed
116	19151516	Washer 15/32 x 15/16 x 16 Ga.

NOTE: All component dimensions given in U.S. inches
1 inch = 25.4 mm

TRACTOR - - MODEL NUMBER 917.203811

GROUND DRIVE

KEY NO.	PART NO.	DESCRIPTION
1	– – – – – –	Transaxle, Hydro Gear T2-CDBE-5X1A-18C1 (581115602) (Order parts from transaxle manufacturer.)
2	123583X	Key Square
15	19131316	Washer 13/32 x 13/16 x 16 Ga.
17	197296	Spring, Brake
22	197660	Rod Shift
23	140845	Knob
29	581506401	Rod, Brake
33	12000001	Ring E
35	583864501	Rod, Brake, Park
37	121749X	Washer 25/32 x 1-1/4 x 16
42	8883R	Cover, Foot Pedal
49	72110614	Bolt
50	194327	Pulley Idler Flat
51	73900600	Lock Nut 3/8-16
52	194326	Idler V-Groove
56	592855301	V-Belt, Drive
64	196200	Shaft Asm. Pedal Brake Control
70	193220X428	Console
73	74490544	Bolt Hex 5/16-18 x 2-1/2 G5
74	142432	Screw 1/4 x 1/2
80	581550701	Strap Torque
99	408418	Rod Spring Bypass
114	73800500	Nut Lock
116	73900500	Nut Lock Hex Flange 5/16-18
121	175611	Bracket Strap Torque
122	72010520	Bolt 5/16-18 x 2.50
125	17000512	Screw 5/16-18 x 3/4
143	539990858	Screw THDROL 5/16-18 x 1/2
153	4497H	Retainer Spring 1"
159	76020412	Pin Cotter 1/8 x 3/4
160	169484	Retainer Clip
161	105709X	Spring, Return, Clutch
166	429164	Nut Push .625
167	405257	Latch Brake Parking
170	413430	Keeper Belt Centerspan
174	197289	Nut Push
175	408539	Shaft Asm Shift
176	196214	Arm Clevis Rod Shift
178	197456	Spring Shift
183	156972	Spacer Axle
184	196439X428	Handle Parking Brake
185	72110622	Bolt
186	194321	Spacer Retainer
187	19133210	Washer
188	582217001	Link Clutch Ground Drive, Long
189	194317	Bellcrank Ground Drive
190	194318	Keeper Bellcrank Ground Drive
205	121748X	Washer 25/32 x 1-5/8 x 16 Ga.
211	196212	Bushing Shaft
216	196131	Bracket Pulley Idler
221	403187	Retainer Spring Clip Handle
231	407287	Idler V-Groove
232	74780716	Bolt 7/16-14 x 1 Gr 5
233	405296	Washer Serrated
279	424155	Link Shift

NOTE: All component dimensions given in U.S. inches
1 inch = 25.4 mm

ENGINE

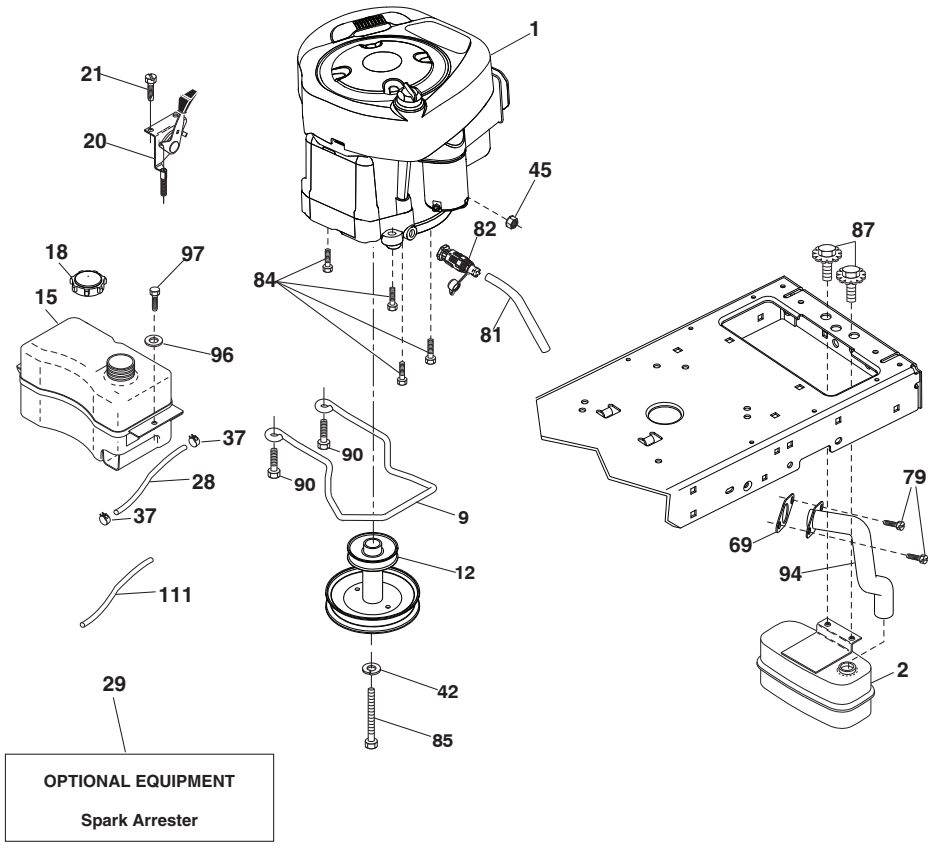

OPTIONAL EQUIPMENT

Spark Arrester

engine-tex_BS_132

MOWER DECK

KEY NO.	PART NO.	DESCRIPTION
1	196495X615	Mower Housing
2	539990316	RHSNB 5/16-18 x 3/4 Gr. 5 ZD
6	195186	Arm Suspension
7	416358	Screw 10 x .750 BOS Thread
11	424752	Blade, 3N1 Premium (For bagging or discharge)
12	584309301	Screw
13	587256501	Shaft Assembly, Mandrel
14	187281	Housing, Mandrel
15	585323901	Bearing, Mandrel
19	196539	Bolt, Shoulder
20	159770	Baffle, Vortex
21	73680500	Nut, Crownlock 5/16-18 unc
23	192557	Bracket, Deflector
24	105304X	Cap, Sleeve
25	197026	Spring, Torsion, Deflector
26	110452X	Nut, Push
27	424469	Shield, Deflector
29	131491	Rod, Hinge
32	197473	Pulley, Mandrel
33	400234	Nut, Toplock, Flanged
34	72110612	Bolt Carr 3/8-16 x 1-1/2 Gr. 5
36	197379	Pulley Idler
37	19131316	Washer 13/32 x 13/16 x 16 Ga.
38	432520	Keeper Belt LH Mandrel
40	73900600	Nut, Lock Flg. 3/8-16 unc
41	584953901	Bolt Hx Wsh Hd 313-18 x 1.19
42	198410	Spring Torsion Brake
43	197256	Spring Torsion Retainer
46	137729	Screw Thd Roll 1/4-20 x 5/8
47	197250	Bracket Clutch Cable
55	437110	Arm, Idler
56	199092	Spacer, Retainer
57	17000616	Screw Hexwsh Thd 3/8-16 x 1
59	141043	Guard, Tuv Idler (94)
60	197261	Arm Brake Mower
62	72110616	Bolt Rdhd Sqnk 3/8-16 unc x 2
63	199477	Arm Brake Mower
64	199790	Linkage Brake
67	198398X667	Handle, Clutch Cable
68	429636	V-Belt
69	72140505	Bolt Rdhd Sqnk 5/16-18 x 5/8
70	199972	Clutch Asm. Manual
111	404784	Bracket, Gauge Wheel LH
112	404785	Bracket, Gauge Wheel RH
113	17000510	Screw 5/16-18
116	4898H	Bolt, Shoulder
117	589527401	Wheel, Gauge
119	19121414	Washer 13/32 x 7/8 x 14 Ga.
122	197258	Keeper Belt Eng. LH
123	197259	Keeper Belt Eng. RH
144	199204	Keeper Belt
145	193197	Pulley, Idler, Flat
147	401971	Spring Return
152	584243501	Cable Clutch Manual w/Spr.
188	195161	Stud Fastener
189	73900500	Nut Lock Hex Flange
192	197260	Bracket Brake Stand LH
195	17000612	Screw Hexwsh Thdr 3/8-16 x 3/4
241	152927	Screw
242	415598	Washout Port
- -	416405	Quick Connect Coupling
- -	437732	Replacement Mower, Complete
- -	587253301	Mandrel Assembly (Includes housing (key #14), shaft assembly (key #13), and bearing (key #15) only - pulley/nut/washer and blade bolt/washers not included)

NOTE: All component dimensions given in U.S. inches
1 inch = 25.4 mm

MOWER DECK

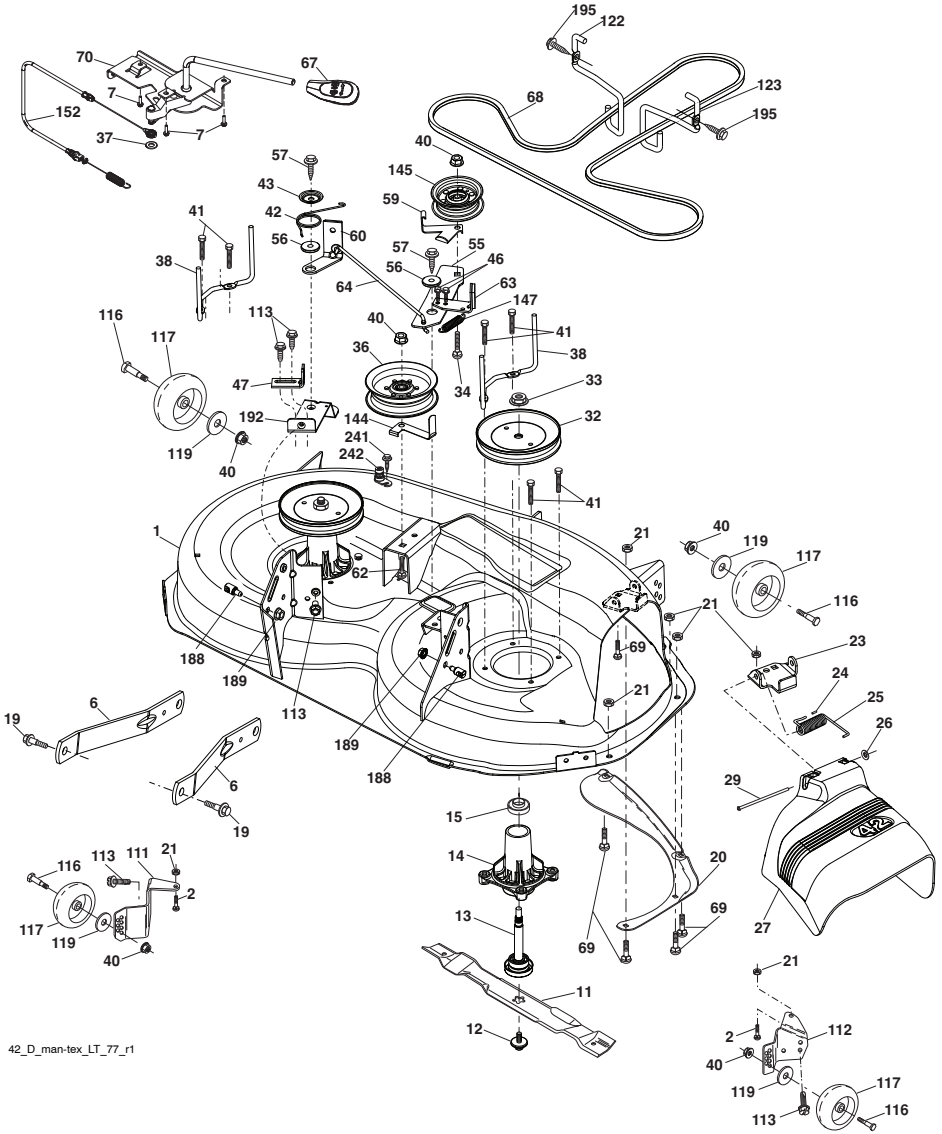

ENGINE

KEY NO.	PART NO.	DESCRIPTION
1	– – – – –	Engine B&S Model No. 33R877-0002-G1 (585366801) (See engine breakdown.)
2	590645301	Muffler
9	582540302	Keeper Belt Engine
12	586729001	Pulley Engine
15	433004	Tank Fuel
18	581176101	Cap Asm. Fuel
20	175438X428	Control Throttle/Choke
21	416358	Screw 10 x .750 BOS Thread
28	401137	Fuel Line
29	137180	Spark Arrester Kit
37	123487X	Clamp Hose
42	539990247	Washer Lock 7/16
45	73510400	Nut Keps Hex 1/4-20 unc
69	165291	Gasket
79	192334	Screw 5/16-18 x .75
81	148456	Tube, Drain
82	428287	Oil Drain
84	17060620	Screw 3/8-16 x 1-1/4
85	501606501	Bolt Hex 7/16-20 x 4 x Gr. 5-1.5
87	171877	Bolt 5/16-18 unc x 3/4 w/Sems
90	17000616	Screw 3/8-16 x 1.0
94	581880901	Exhaust Tube
96	19091416	Washer 9/32 x 7/8 x 16 Ga.
97	17670412	Screw 1/4-20 x 3/4
111	414119	Purge Line

NOTE: All component dimensions given in U.S. inches
1 inch = 25.4 mm

Engine Power Rating Information

The gross power rating for individual gas engine models is labeled in accordance with SAE (Society of Automotive Engineers) code J1940 (Small Engine Power & Torque Rating Procedure), and rating performance has been obtained and corrected in accordance with SAE J1995 (Revision 2002-05). Torque values are derived at 3060 RPM; horsepower values are derived at 3600 RPM. Actual gross engine power will be lower and is affected by, among other things, ambient operating conditions and engine-to-engine variability. Given both the wide array of products on which engines are placed and the variety of environmental issues applicable to operating the equipment, the gas engine will not develop the rated gross power when used in a given piece of power equipment (actual “on-site” or net power). This difference is due to a variety of factors including, but not limited to, accessories (air cleaner, exhaust, charging, cooling, carburetor, fuel pump, etc.), application limitations, ambient operating conditions (temperature, humidity, altitude), and engine-to-engine variability. Due to manufacturing and capacity limitations, Briggs & Stratton may substitute an engine of higher rated power for this Series engine.

STEERING ASSEMBLY

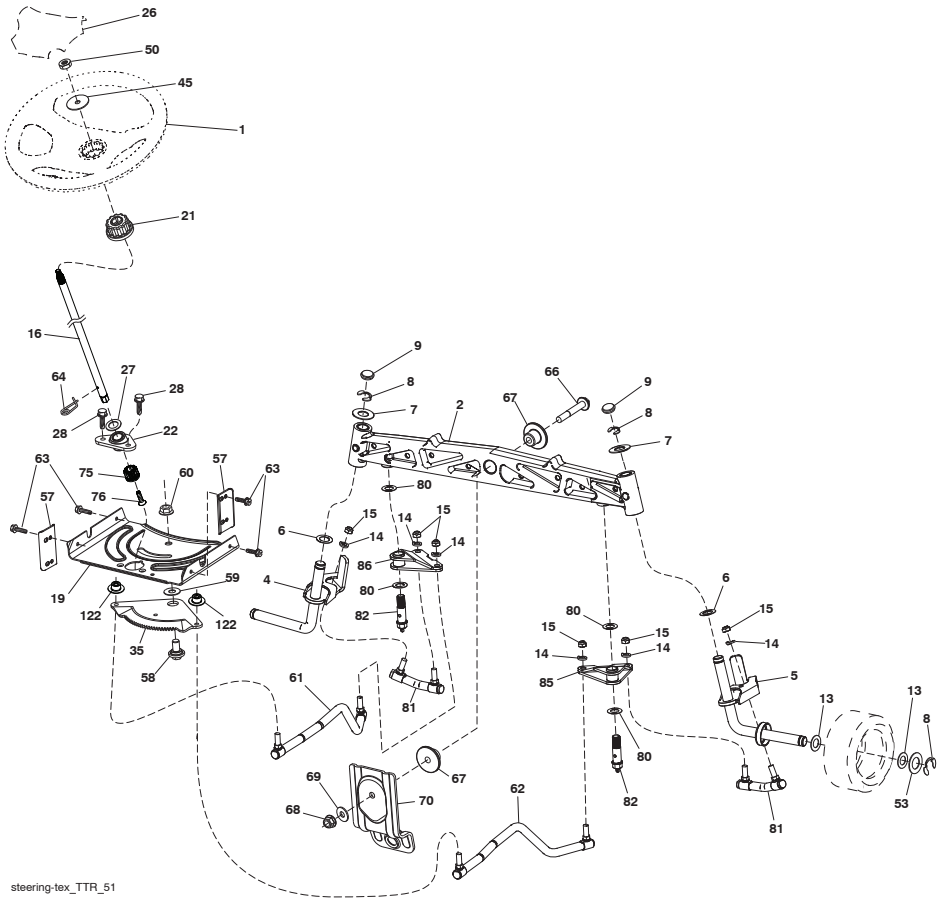

KEY NO.	PART NO.	DESCRIPTION
1	414803X428	Wheel, Steering
2	436870	Axle Asm., Front
4	436873	Spindle Asm., LH
5	436874	Spindle Asm., RH
6	6266H	Washer Thrust
7	121748X	Washer 25/32 x 1-5/8 x 16 Ga.
8	12000029	Ring, Klip #T5304-75
9	184946X667	Cap, Spindle
13	121749X	Washer 25/32 x 1-1/4 x 16 Ga.
14	539990118	Washer 3/8 Slw 2D
15	73540600	Nut, Crown Lock 3/8-24 unf
16	587016002	Shaft Steering
19	194729	Plate Steering
21	586840201	Adapter, Wheel Steering Splnd Alum
22	585029901	Bearing Subasm Shaft Steer Low
26	414852X428	Insert, Wheel Steering
27	19211616	Washer 21/32 x 1 x 16 Ga.
28	17000612	Screw 3/8-16 x 3/4
35	440770	Gear, Sector Plate
45	587016401	Washer 3/8 ID 2-3/8OD 12 Ga.
50	73900600	Nut Lock Flg. 3/8-16 unc
53	188967	Washer Hardened .793 x 1.637 x .060

KEY NO.	PART NO.	DESCRIPTION
57	407465	Bracket Upstop
58	194747	Bolt Shoulder Sector Pivot CFM
59	194748	Washer Thrust Sector Steering
60	73971000	Nut Flange Lock 5/8-11
61	436884	Draglink LH
62	436885	Draglink, RH
63	17000512	Screw 5/16-18 x 3/4
64	199849	Retainer Clip Spring Steering
66	71020748	Bolt Hex Fghd 7/16-14 x 3 Serr
67	194737	Bushing PM Front Axle
68	73900700	Nut Lock Flange 7/16-14 Gr. 5
69	199162	Washer 1.5 x .505 x .118
70	585338801	Bracket Deck Susp. Front
75	580683701	Pinion
76	580683601	Screw Head Sock
80	1370H	Washer
81	436887	Link RH
82	442147	Pivot Bolt
85	441873	Pivot RH
86	441872	Pivot LH
122	444962	Cap Gear

NOTE: All component dimensions given in U.S. inches
1 inch = 25.4 mm

SEAT ASSEMBLY

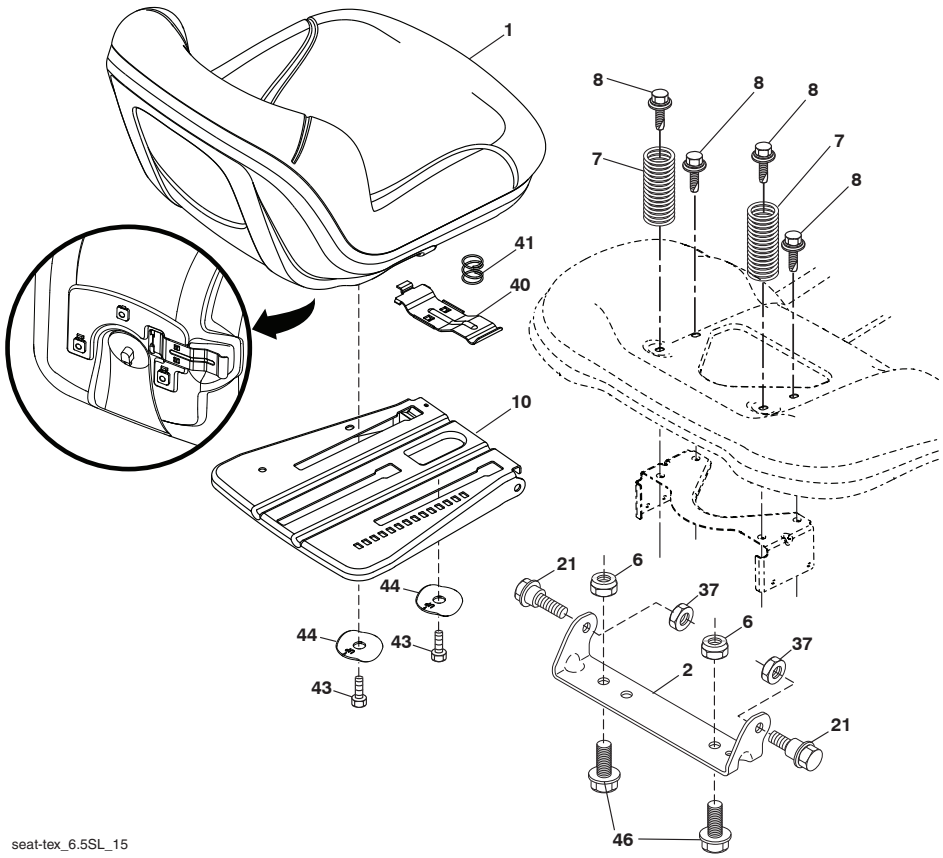

KEY NO.	PART NO.	DESCRIPTION
1	586507601	Seat
2	180166	Bracket Pivot Fender
6	73800600	Nut, Lock W/Ins. 3/8-16 unc
7	589483501	Spring, Seat Cprsn
8	171877	Bolt 5/16-18 unc x 3/4 w/Sems
10	587232002	Pan, Seat
21	587907801	Bolt, Shoulder 5/16-18 x 5/8
37	73800500	Nut, Lock 5/16-18 unc
40	197661	Handle Slide Seat

KEY NO.	PART NO.	DESCRIPTION
41	198200	Spring Latch Seat
43	74760612	Bolt 3/8-16 x 3/4
44	501051801	Washer Winged 3/8 ID 1.5 OD
46	588090401	Bolt 3/8-16 x 1, 1.25 OD

NOTE: All component dimensions given in U.S. inches
1 inch = 25.4 mm